2000 Gal. (9100 L) Water Cistern

Notes:

1. Concrete: 35 mpa Air 5-7%
2. Weight: 14,000 lbs. (6350 kgs.)
3. Maximum cover: 5 ft. (1.5 m)

Drawing Date: Jan 1, 2022

Acton Precast Concrete Limited
Acton Ont. 1-800-461-1516

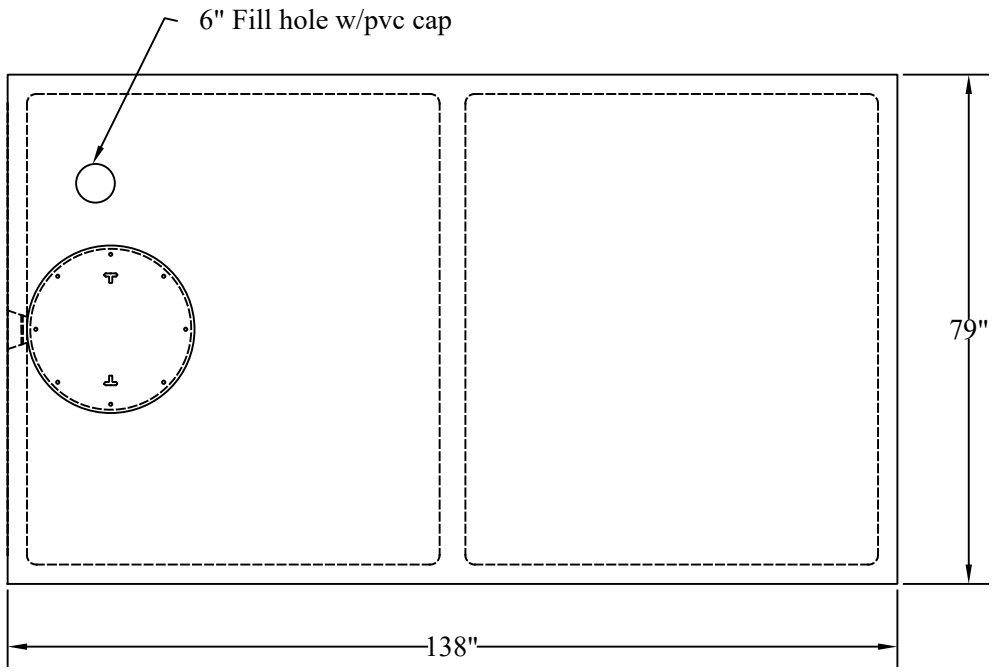

Top View

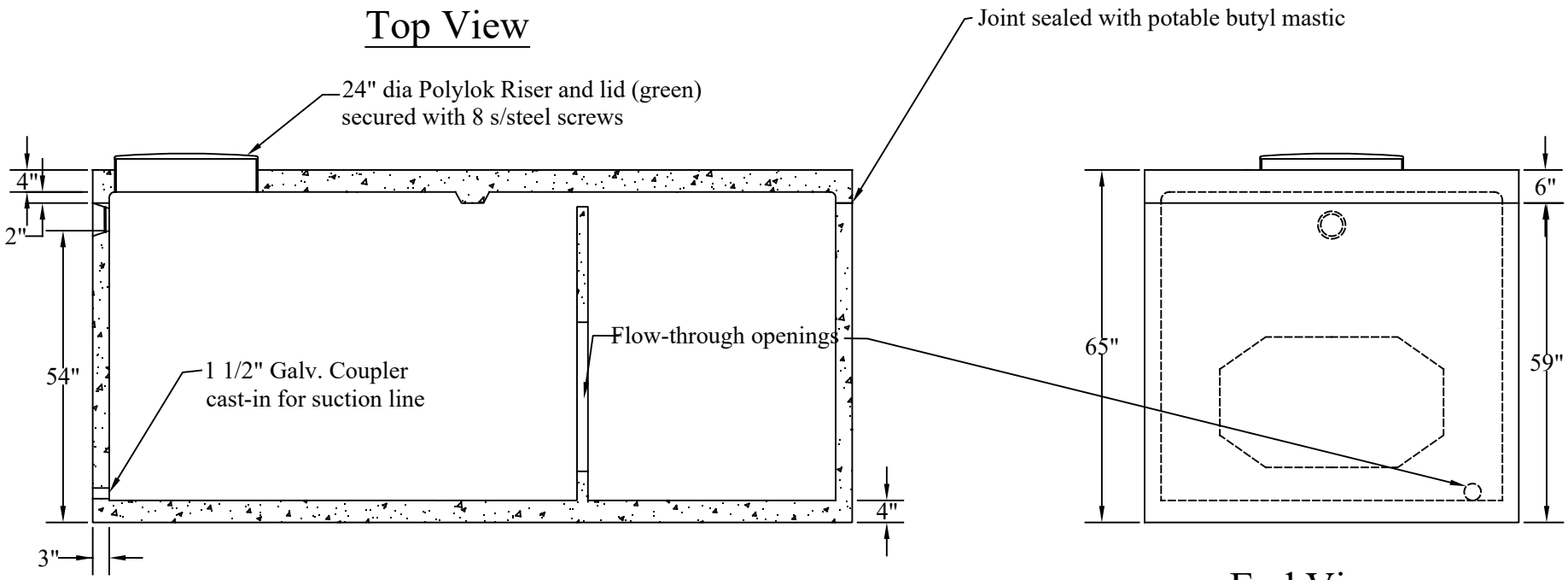

Section

End View